VECTORWORKS EDUCATIONAL VERSION

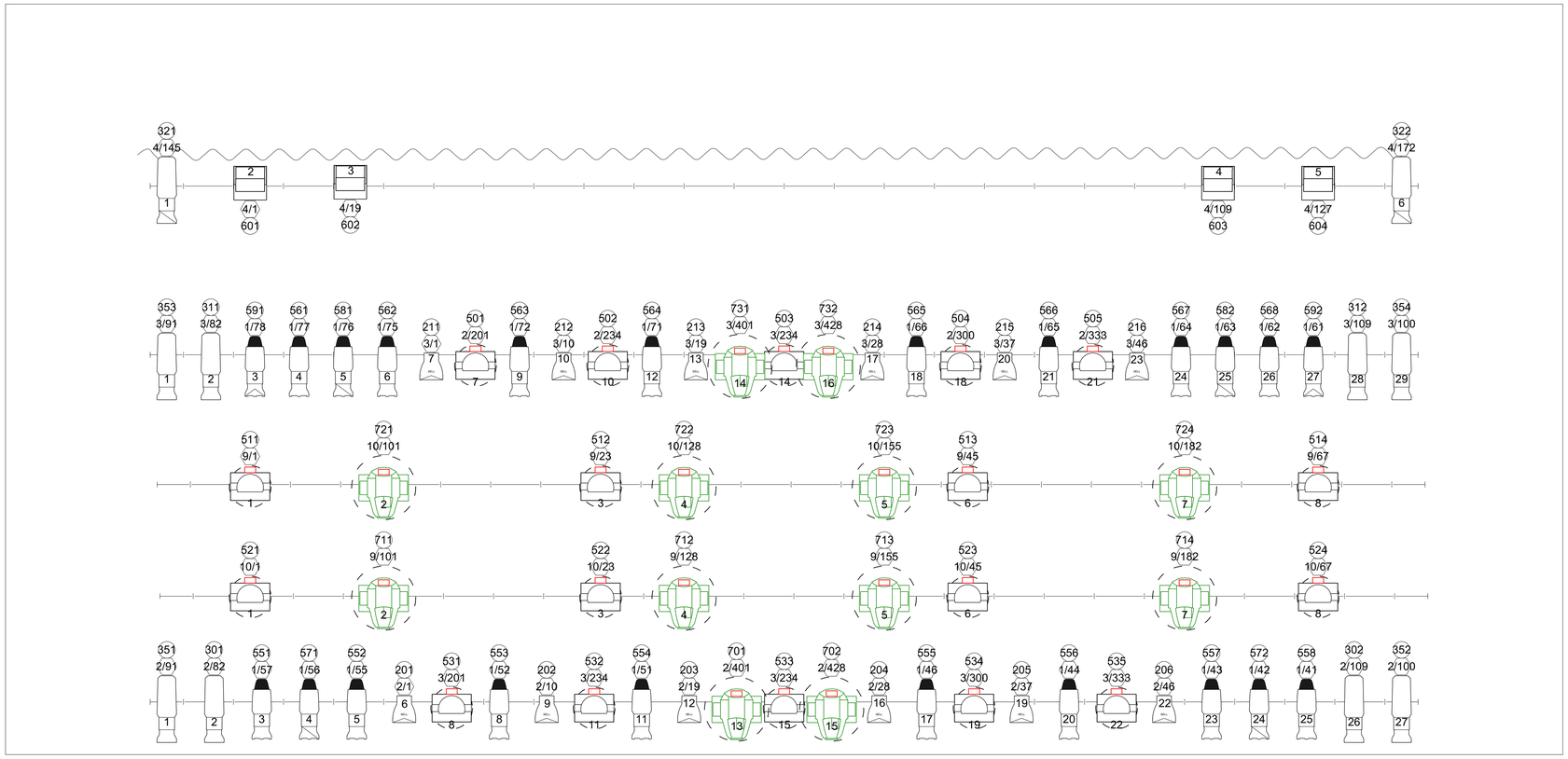

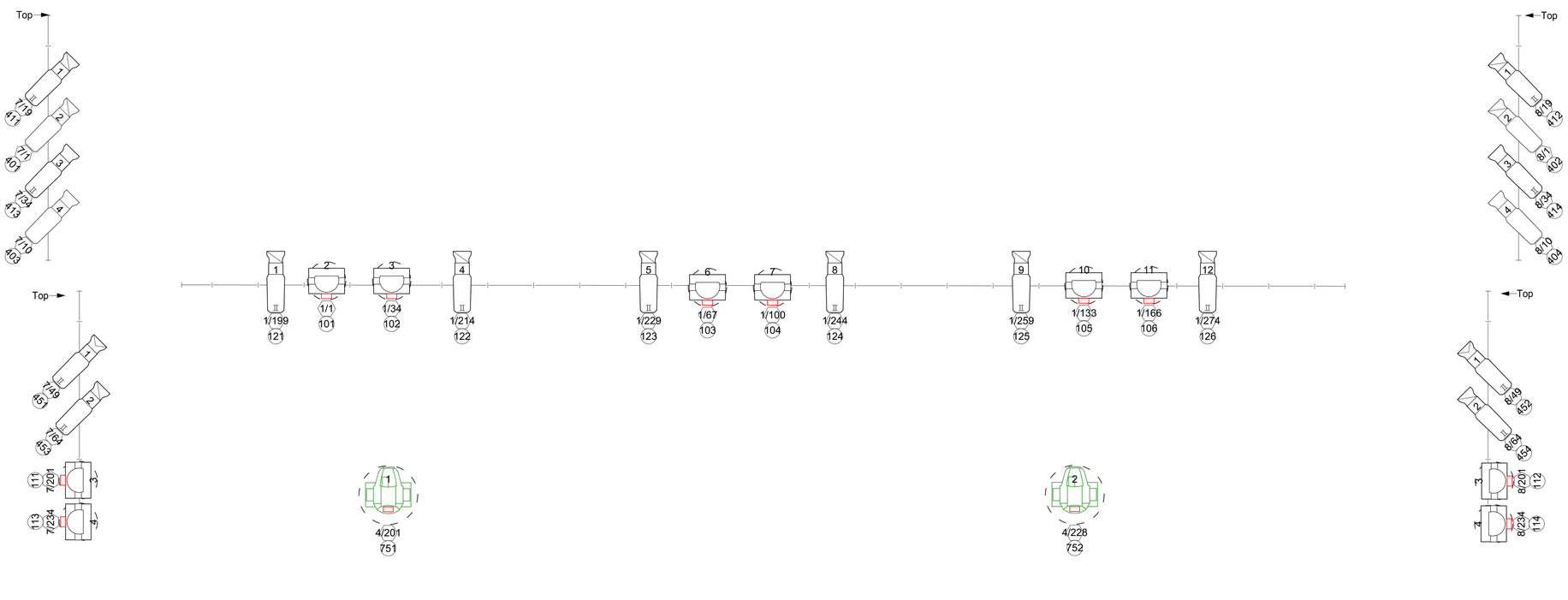

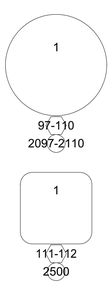

General Notes

1. Designers are not responsible for the integrity of the architecture and rigging.

   Electric battens controlled by ETC Prodigy system; control panel in SR wing.

   All questions regarding the plot can be sent to Tyler Sperrazza at txs392@psu.edu.

Instrument Key:

- ETC Source4 26deg 750W @ 750w
- ETC Source4 36deg 750W @ 750w
- ETC Source4 50deg 750 @ 750w
- ETC Source4 LEDLS 26deg @ 117w
- ETC Source4 LEDLS 36deg @ 117w
- ETC Source4 LED2DS 26deg @ 246w
- ETC Source4 LED2DS 36deg @ 246w
- ETC Source4 LED2DS 50deg @ 246w
- ETC D40 Vivid SELL40 @ 110w
- Ovation C-640FC @ 175w
- Chauvet Rogue R2 Wash @ 339w
- Martin Mac Quantum Profile @ 750w

Instrument Legend:

R05 **Color**
1 **Unit Number**
1 **Dimmer or Universe/Address**
1 **Channel**

Production Title:

Jesus Christ Superstar

Production Company:

FUSE Productions

Director:

Richard Biever

Lighting Designer:

Tyler Sperrazza & Roger Tharp

Scenic Designer:

Daniel Allen

Drawn By: Tyler Sperrazza

Venue: Schwab Auditorium

Plot Date: **06.07.2019**

VECTORWORKS EDUCATIONAL VERSION